Company:	
Contact Name:	
Project:	
Order No.	Date:
Dest:	Load By:

CEE SECTION

Steel Sections

Howard Street, Hill Top, West Bromwich
West Midlands, B70 0ST

Tel: 0121 556 9111
Fax: 0121 502 5611

SINGLE SPAN CEE

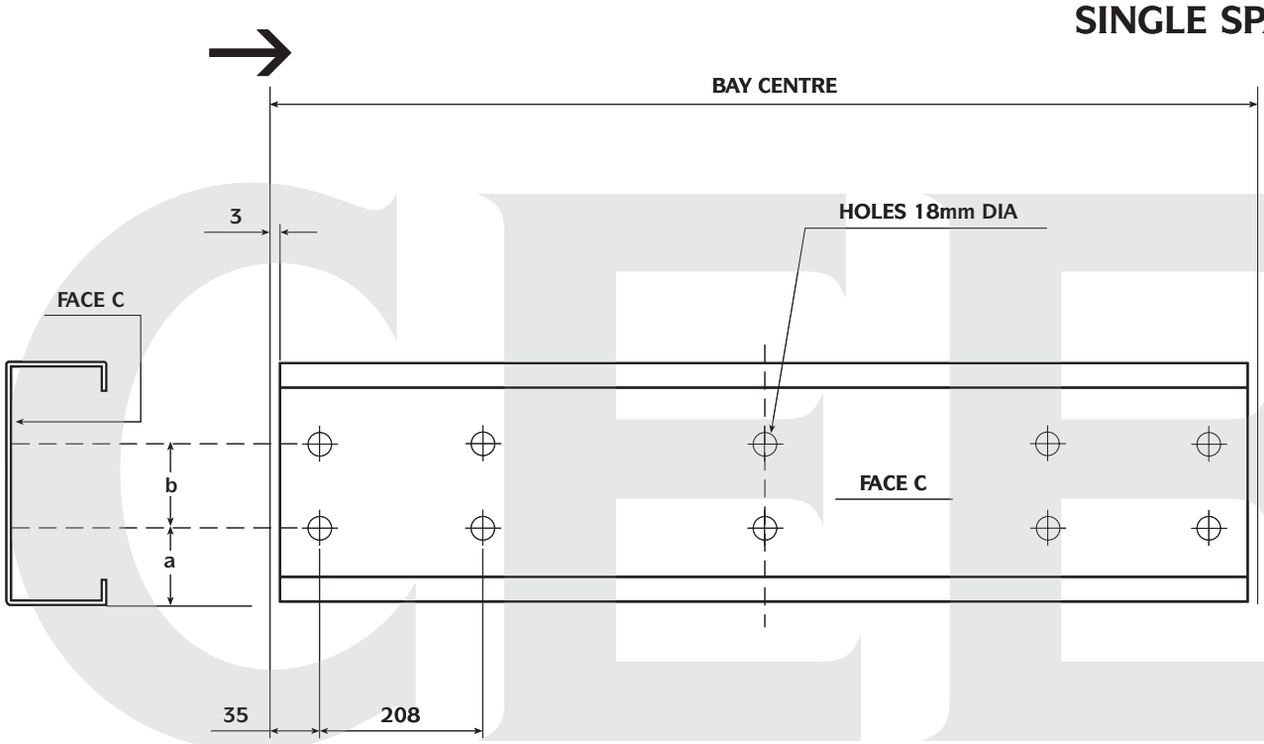

CEE Section Size	a	b
140	40	60
177	40	80
200	40	116

CEE Section Ref					Bay Centre	Qty	Mark Up
Depth			Thickness				

Company:	
Contact Name:	
Project:	
Order No.	Date:
Dest:	Load By:

CEE SECTION

Steel Sections

Howard Street, Hill Top, West Bromwich
West Midlands, B70 0ST

Tel: 0121 556 9111
Fax: 0121 502 5611

STANDARD CEE

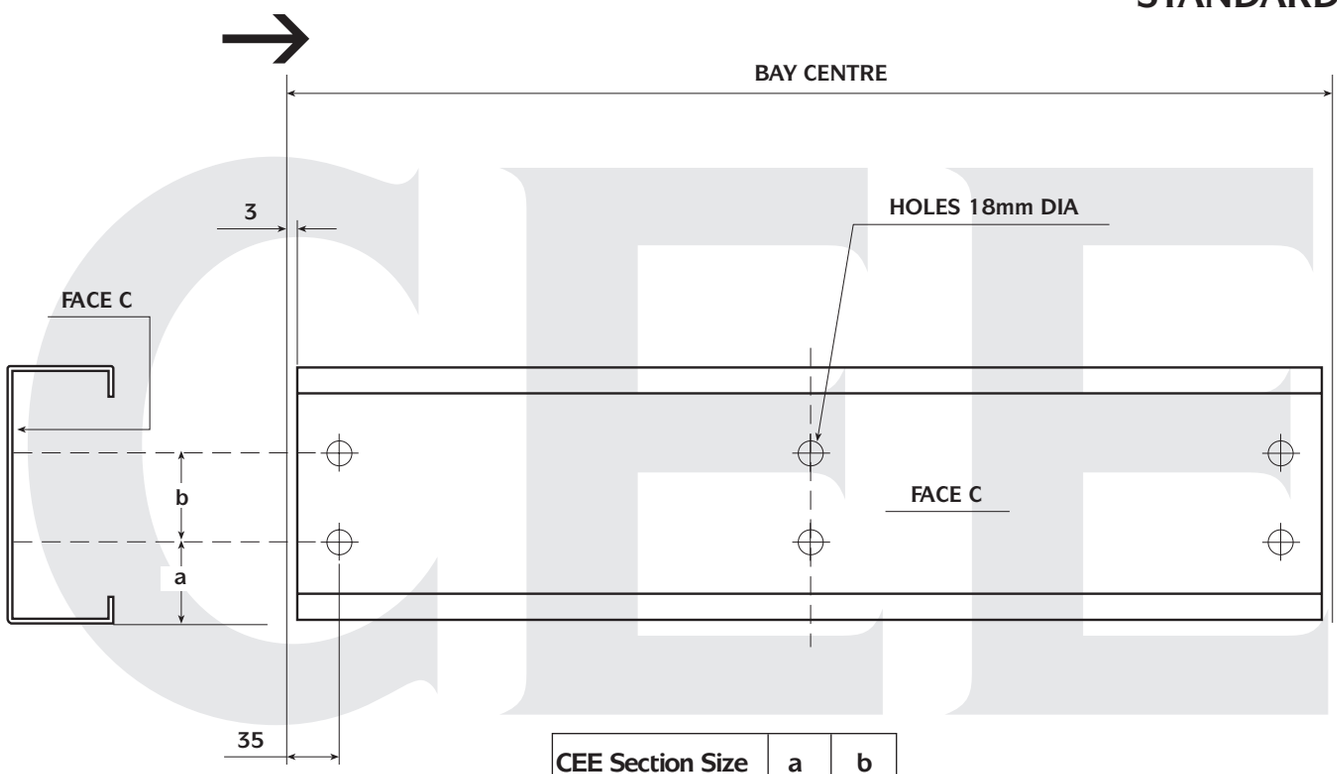

CEE Section Size	a	b
140	40	60
177	40	80
200	40	116

CEE Section Ref					Bay Centre	Qty	Mark Up
Depth			Thickness				

Company:	
Contact Name:	
Project:	
Order No.	Date:
Dest:	Load By:

CEE SECTION

Steel Sections

Howard Street, Hill Top, West Bromwich
West Midlands, B70 0ST

Tel: 0121 556 9111
Fax: 0121 502 5611

PLAIN CEE

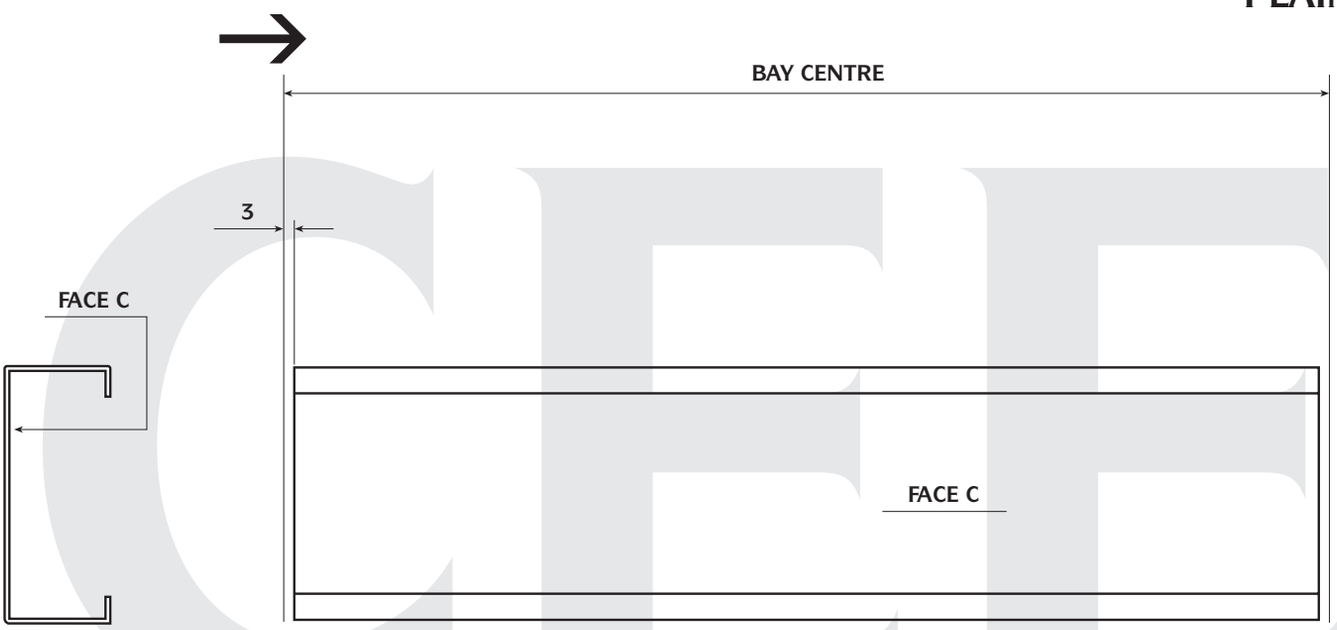

CEE Section Size
140
177
200

CEE Section Ref					Bay Centre	Qty	Mark Up
Depth			Thickness				

Company:	
Contact Name:	
Project:	
Order No.	Date:
Dest:	Load By:

CEE SECTION

Steel Sections

Howard Street, Hill Top, West Bromwich
West Midlands, B70 0ST

Tel: 0121 556 9111
Fax: 0121 502 5611

LEFT-HAND OVERHANG CEE

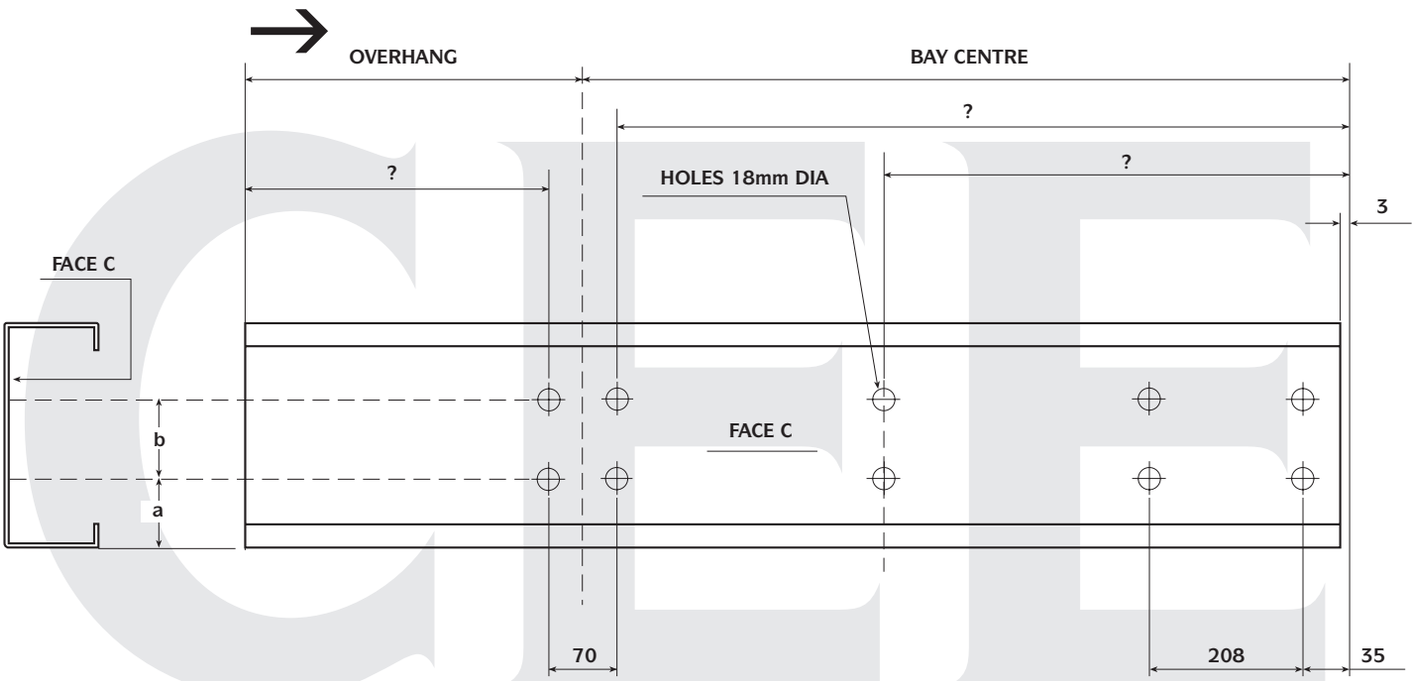

CEE Section Size	a	b
140	40	60
177	40	80
200	40	116

CEE Section Ref					Bay Centre	Overhang	Qty	Mark Up
Depth			Thickness					

Company:	
Contact Name:	
Project:	
Order No.	Date:
Dest:	Load By:

CEE SECTION

Steel Sections

Howard Street, Hill Top, West Bromwich
West Midlands, B70 0ST

Tel: 0121 556 9111
Fax: 0121 502 5611

RIGHT-HAND OVERHANG CEE

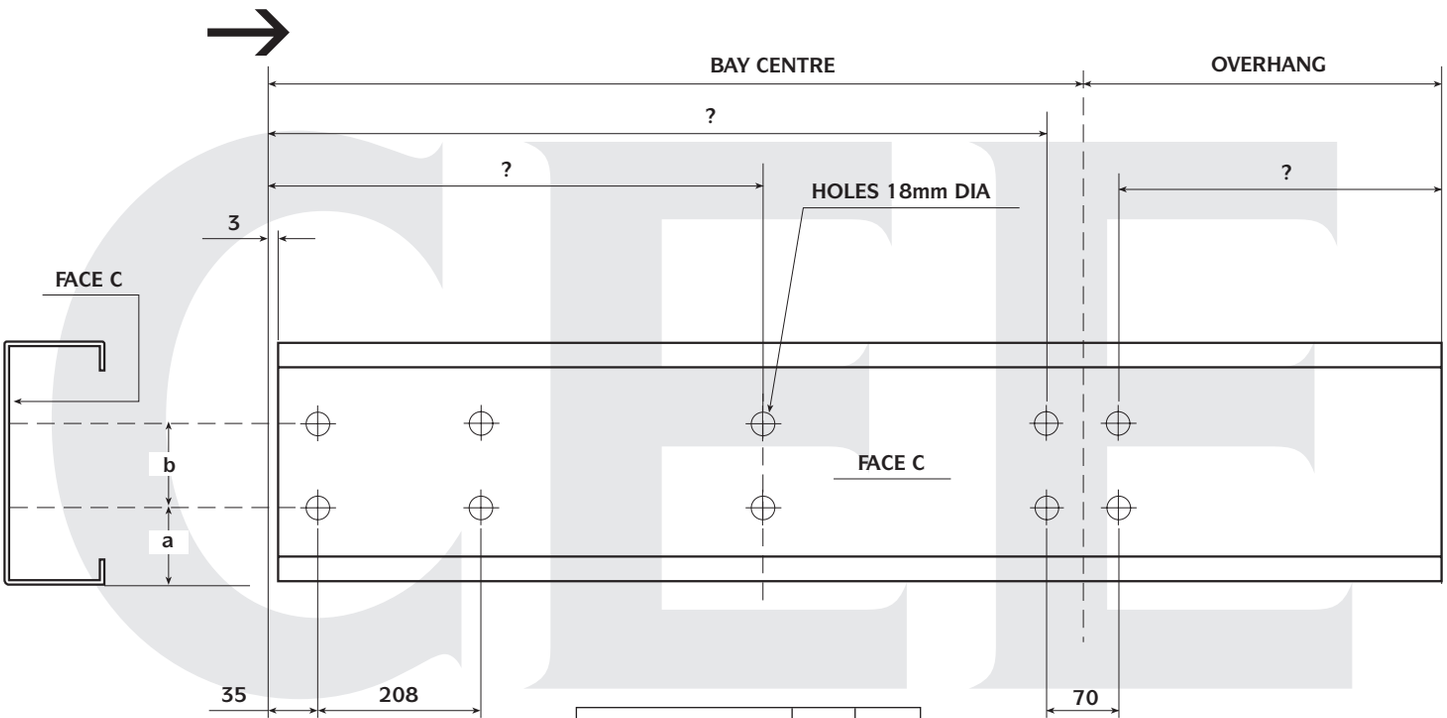

CEE Section Size	a	b
140	40	60
177	40	80
200	40	116

CEE Section Ref					Bay Centre	Overhang	Qty	Mark Up
Depth			Thickness					